EN

CENTRIFUGAL FANS
user's manual

model VENTS VK

www.ventilation-system.com

2013

WARNING!

Disconnect the fan from power mains prior to any connection, servicing and repair operations. Mounting and maintenance are allowed for duly qualified electricians with valid electrical work permit for electric operations at the units up to 1000 V after careful study of the user's manual.
The single-phase power mains must comply with the acting local electrical norms and standards.
The fixed electrical wiring must be equipped with an automatic circuit breaker. The fan must be connected to power mains through an automatic circuit breaker QF integrated into the fixed wiring system with the gap between the breaker contacts on all poles not less than 3 mm.
Check the fan for any visible damages of the impeller and the casing before starting installation. The casing must be free of any foreign objects that could damage the impeller blades. Misuse of the device or any unauthorized modifications are not allowed.
The fan is not to be used by children and persons with reduced physical, mental or sensory capacities, without proper practical experience or expertise, unless they are controlled or instructed on the product operation by the person(s) responsible for their safety. Do not leave children unattended and do not let them play with the product.
Take steps to prevent ingress of smoke, carbon monoxide and other combustion products into the room through open chimney flues or other fire-protection devices. Sufficient air supply must be provided for proper combustion and exhaust of gases through the chimney of fuel burning equipment to prevent back drafting.
Transported medium must not contain any dust or other solid impurities, sticky substances or fibrous materials.
Do not use the fan in the environment containing hazardous or explosive materials and vapours, i.e. spirits, gasoline, insecticides, etc. Do not close or block the fan intake or extract vents in order to ensure the most effective air passage.
Do not sit on the fan and do not put objects on it.
Fulfil the requirements stated in the user's manual to ensure long service life of the product.

Recycle at the end of the service life.

Do not dispose the product with unsorted municipal trash.

DELIVERY SET

The delivery set includes:

1. Fan - 1 item;
2. Screws and dowels - 4 items;
3. Fixing bracket - 2 items;
4. User's manual;
5. Packing box.

BRIEF DESCRIPTION

The product described herein is a centrifugal fan for supply and exhaust ventilation of premises heated in cold season.

The fan is designed for connection to 100, 125, 150, 200, 250 and 315 mm air ducts.
The model with O 150 mm spigot is compatible both with O 150 mm and O 160 mm air ducts.

- VENTS VK XXX - basic model.
- VENTS VKS XXX - fan with a high-powered motor.
- VENTS VK XXX Q - fan with a low-powered and low-noise motor with low energy demand.
- VENTS VK XXX R - fan with a power cable, fig. 10.
- VENTS VK XXX U (U1) - fan with a speed controller and electronic thermostat, equipped with a built-in temperature sensor and a power cable with adapter, fig. 11.
- VENTS VK XXX Un (U1n) - fan with a speed controller and electronic thermostat, equipped with an external temperature sensor fixed on 4 m cable, a power cable with adapter, fig. 11.
- VENTS VK XXX P - fan with a speed controller and a power cable with adapter, fig. 12.

XXX - spigot diameter.

Due to constant improvements the design of some models may slightly differ from those ones described in this manual.

OPERATION GUIDELINES

The fan is designed for connection to AC single-phase 220…240 V, 50/60 Hz power mains. The fans models VK 315 / VKS 315 are designed for connection to 220…240 V, 50 Hz power mains.
The fan is designed for continuous operation always connected to power mains.
Air flow direction in the system must match the pointer direction on the fan casing.
Ingress protection rating against access to hazardous parts and water ingress- IP X4.
The fan is rated for operation at the ambient temperature ranging from +1 °C up to +45 °C.
Transported air temperature:
- VK 100/ VK 100 Q/ VK 125/ VK 125 Q/ VK 150: from -25 °C up to +55 °C;
- VK 200/ VK 250/ VK 250 Q/ VK 315: from -25 °C up to +50 °C;
- VKS 200/ VKS 315: from -25°C up to +45 °C.
The fan requires no grounding.

ELECTRONICS OPERATING LOGIC

The VK U (U1) model, fig. 11 is equipped with an electronic speed controller with electronic thermostat TSC for automatic speed control (air flow regulation) depending on air temperature.
The terminal compartment incorporates 2 control knobs:
- for setting the motor speed;
- for setting the electronic thermostat set point.

The thermostat operation light indicator is located on the fan cover.
To set the thermostat threshold rotate the thermostat control knob clockwise to increase or counter-clockwise to decrease the temperature set point.
To set the fan speed (air capacity) rotate the speed control knob in the same way.
The fan has a temperature-based and timer-based control logic.
- *temperature-based control logic (VK U):* to maintain air temperature with accuracy to within 2 °C. The fan changes its speed rarely. As air temperature rises up to the set thermostat point, the fan switches to high speed. As air temperature drops down 2 °C below the set thermostat point or if the initial air temperature is

- *time* *K U1):* to maint
speed d to the pre
is not air temp
Sync tch d
belo
lowe
If the are is be

fan VK P (fig. 12) is equi
ed (air flow) control from ma

OUNTING
The fan is designed for both stallat on the floor or attached to
the wall or to the ceiling, fig fan prot rotection against water ingress.
The protection examples ar
1. For the top mounting pos g hoo atic cr
2. For any mounting positio aight air duct s ast 1 m long on both sides of the fan.
The fan mounting sequenc n in fig. 3-8.
The fan wiring diagrams are own in fig. 9.

Wiring gram de ns:
L - mi um speed nal;
QF - automatic circu
S - external switch, i.e.
X - i t terminal.

MAINTENANCE

Clean the fan surfaces regularly (once in 6 months) of dust and dirt (fig. 13-20). Disconnect the fan from power mains prior to any maintenance operations. Clean the fan with a soft cloth or a brush wetted in mild water detergent solution. Avoid liquid dripping on the electric components, fig. 41. Wipe the surfaces dry after cleaning.

STORAGE AND TRANSPORTATION RULES

Transportation is allowed with any vehicle provided that the fan is protected against mechanical or weather damage. Store the delivered fan in the manufacturer's original packing box in a dry ventilated premise with the temperature range from +5ºC up to +40ºC and relative humidity less than 80%. The storage environment must not contain dust, acid or alkali vapours that may cause corrosion of the product parts.

MANUFACTURER'S WARRANTY

The fan is manufactured at the factory of "Ventilation systems" PrJSC (hereinafter referred to as the Manufacturer).
By purchasing this product the customer confirms to have read and agreed to the terms, rules and requirements related to operation, storage, transportation, mounting, adjustment, connection, maintenance and repair as well as warranty obligations with respect to this product as set forth in the manufacturer's accompanying documentation to the product.

The manufacturing company sets forth the warranty period (service life) of the product as 24 months following the sale date via retail network subject to the customer's ensuring compliance with the rules of transportation, storage, mounting and operation of the product.

In case of any malfunction of the product through the fault of the Manufacturing company within the warranty period (service life), the customer shall have the right to elimination of the manufacturing defects by means of warranty servicing performed free of charge.
The warranty servicing implies performance of activities related to elimination of defects in the product aimed to provide intended use of the product by the customer. The defects are eliminated either by

NOTE! With the purpose of performing warranty servicing please submit the user's manual or other relevant substituting document and the payment document as an evidence of the purchase with indication of the sale date. The product model shall comply with that one specified in the user's manual or other relevant substituting document. With the purpose of performing warranty servicing please contact your Seller. If warranty servicing on the spot proves impossible, you will be provided with the necessary information regarding rendering of this service.

Manufacturer's warranty shall not apply in the following cases:

- in case the customer fails to provide the product in complete according to the package contents specified in the user's manual or other relevant substituting document, including any components disassembled by the customer;
- in case of incompliance of the model or marking of the product with data specified on the product packaging and in the user's manual or other relevant substituting document;
- in case of non-timely technical maintenance of the product by the customer (dust, mud, oil condensate, foreign particles);
- in case of causing external damage to the product by the customer ('damage' shall not apply to external changes of the product required for the product mounting);
- in case of altering the product design or further reworking of the product;
- in case of replacing and using parts, units and components of the product not prescribed by the manufacturing company;
- in case of other use of the product other than intended use;
- in case of the customer's violating product operation rules;
- in case of connecting the product to electric mains of voltage exceeding voltage value specified in the user's manual;
- in case of step voltage that resulted in the product failure;
- in case of the customer's performing unauthorised repair of the product;
- in case of performing repair of the product by third persons unauthorized by the manufacturing company;
- in case of warranty period (service life) expiry;
- in case of the customer's violating transportation rules assuring prevention of damaging and/or destruction of the product;
- in case of the customer's violating product storage rules;

- in case of performing unlawful actions by third persons with respect to the product;
- in case of force majeure (fire, flood, earthquake, war, hostilities of any kind, blockade);
- no seals, provided such seals are prescribed by the user's manual or other relevant substituting document;
- in case of unavailable warranty card;
- in case of unavailable payment document to confirm the purchase with indication of the sale date.

The manufacturing company shall be responsible for defects arising through its fault prior to the moment of transferring the product to the ownership of the customer.
The manufacturing company shall not be responsible for defects arising after transferring the product to the customer and caused by the customer's violating the rules of transportation, storage, assembly and operation of the product, or by actions of third persons, an accident or force majeure circumstances.

The manufacturing company shall not be responsible for damage to health and property of the customer caused by the customer's violating the user's manual or other relevant substituting document; other use of the product by the customer other than its intended use, or by failure of the customer to comply with warnings and other information on the product specified in the user's manual or other relevant substituting document, or by the customer's violating the rules of transportation, storage, mounting, maintenance and operation of the product.

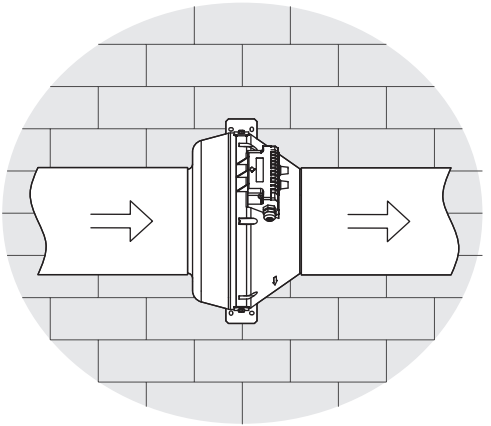

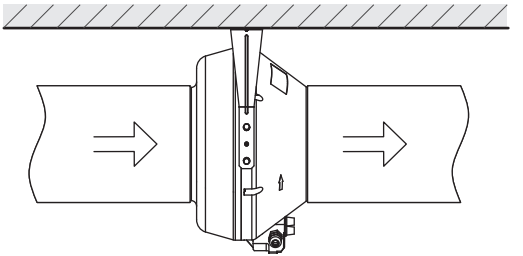

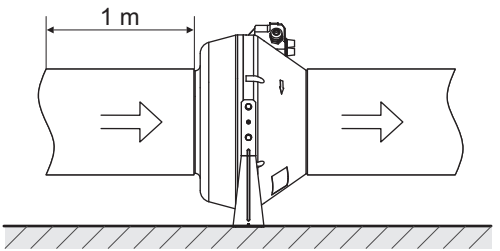

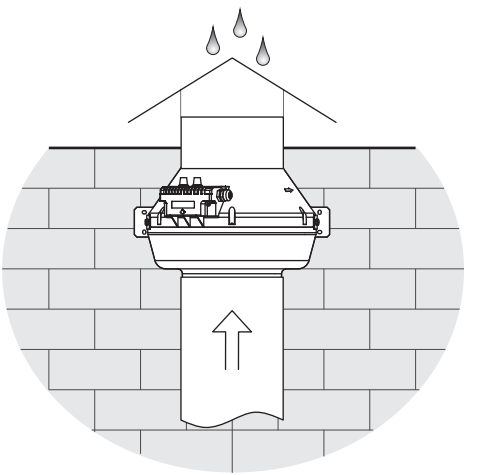

2

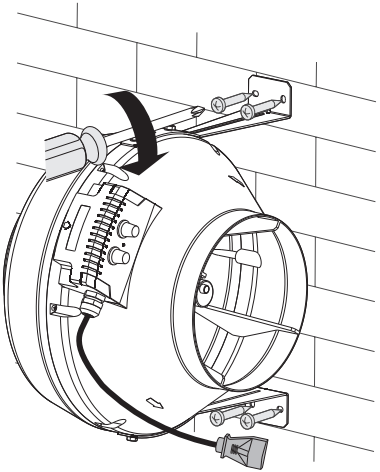

7

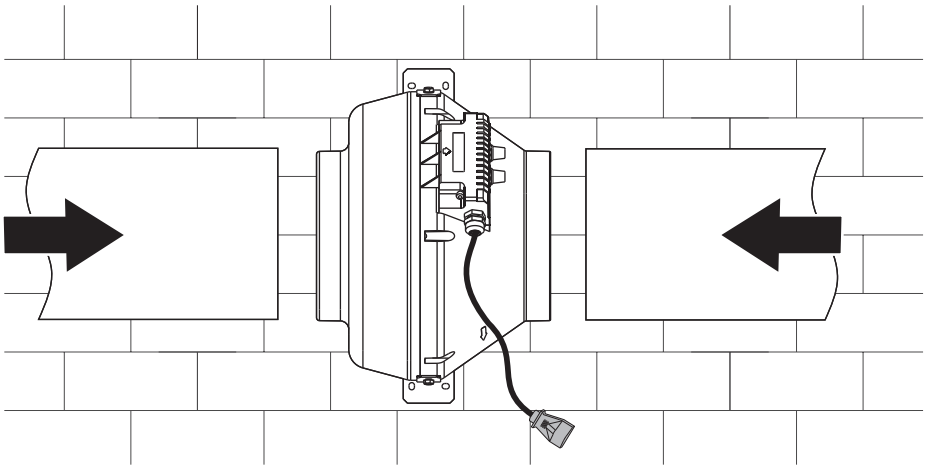

8

VK 100/125/150/200/250/315

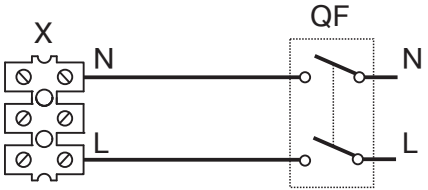

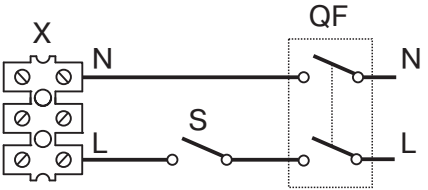

9

VK 100/125/150/200/250/315
U / U1 / Un / U1n / P / R

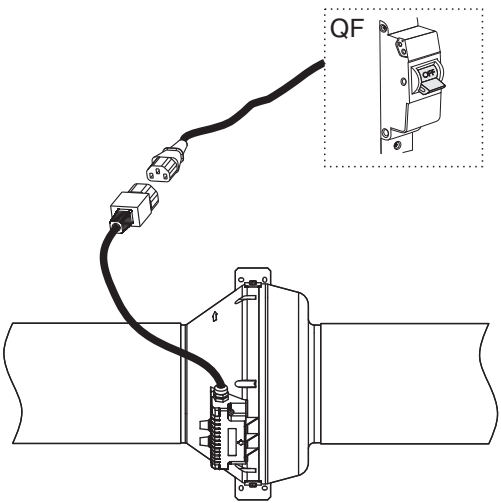

10

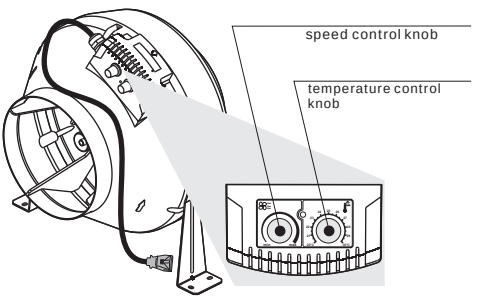

11

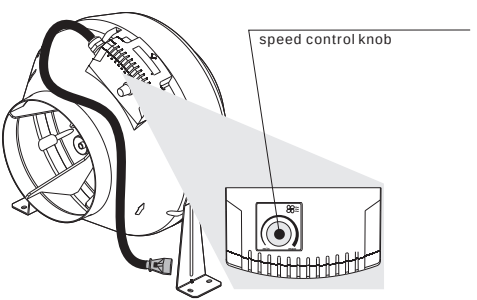

12

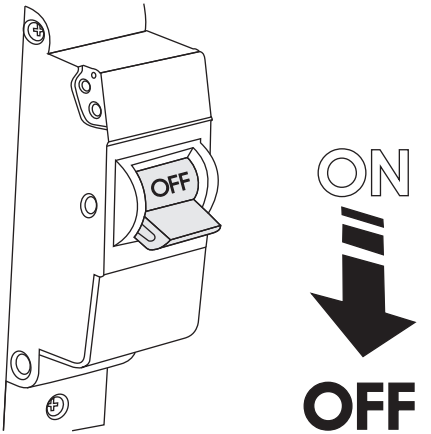

13

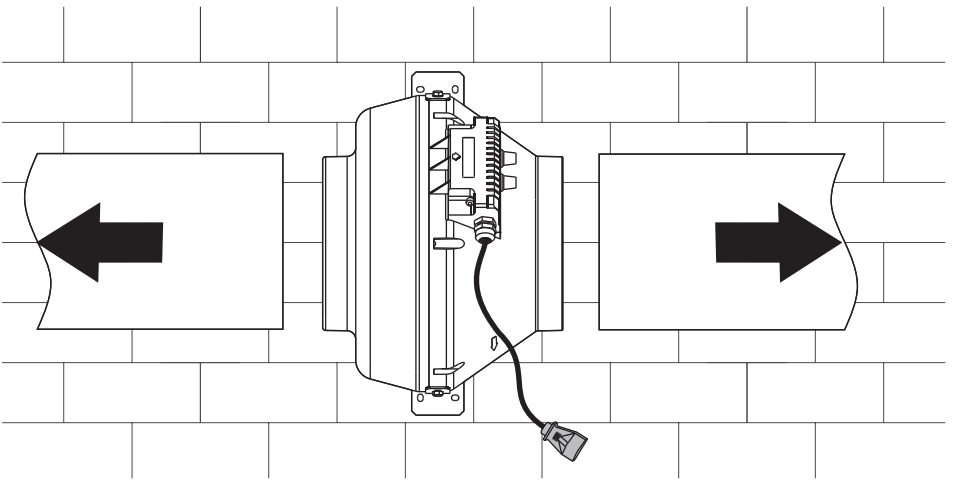

14

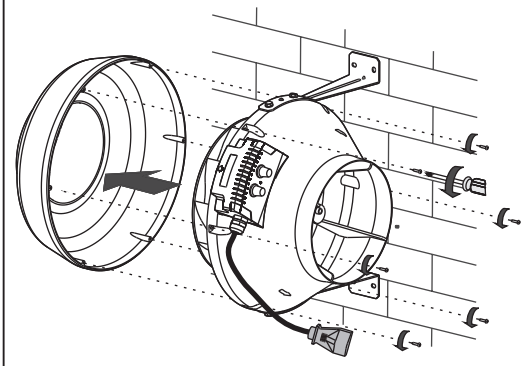

15

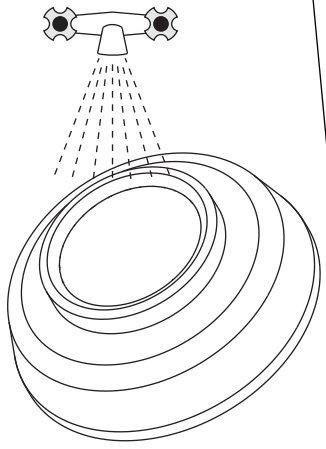

16

17

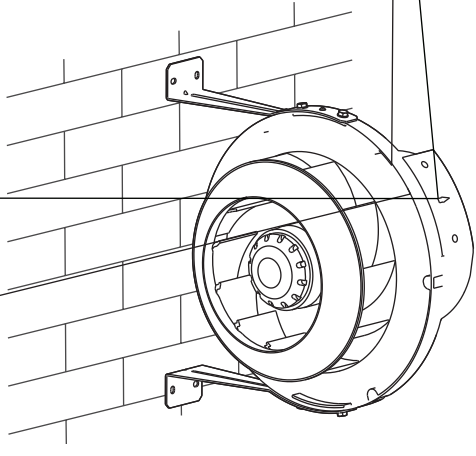

18

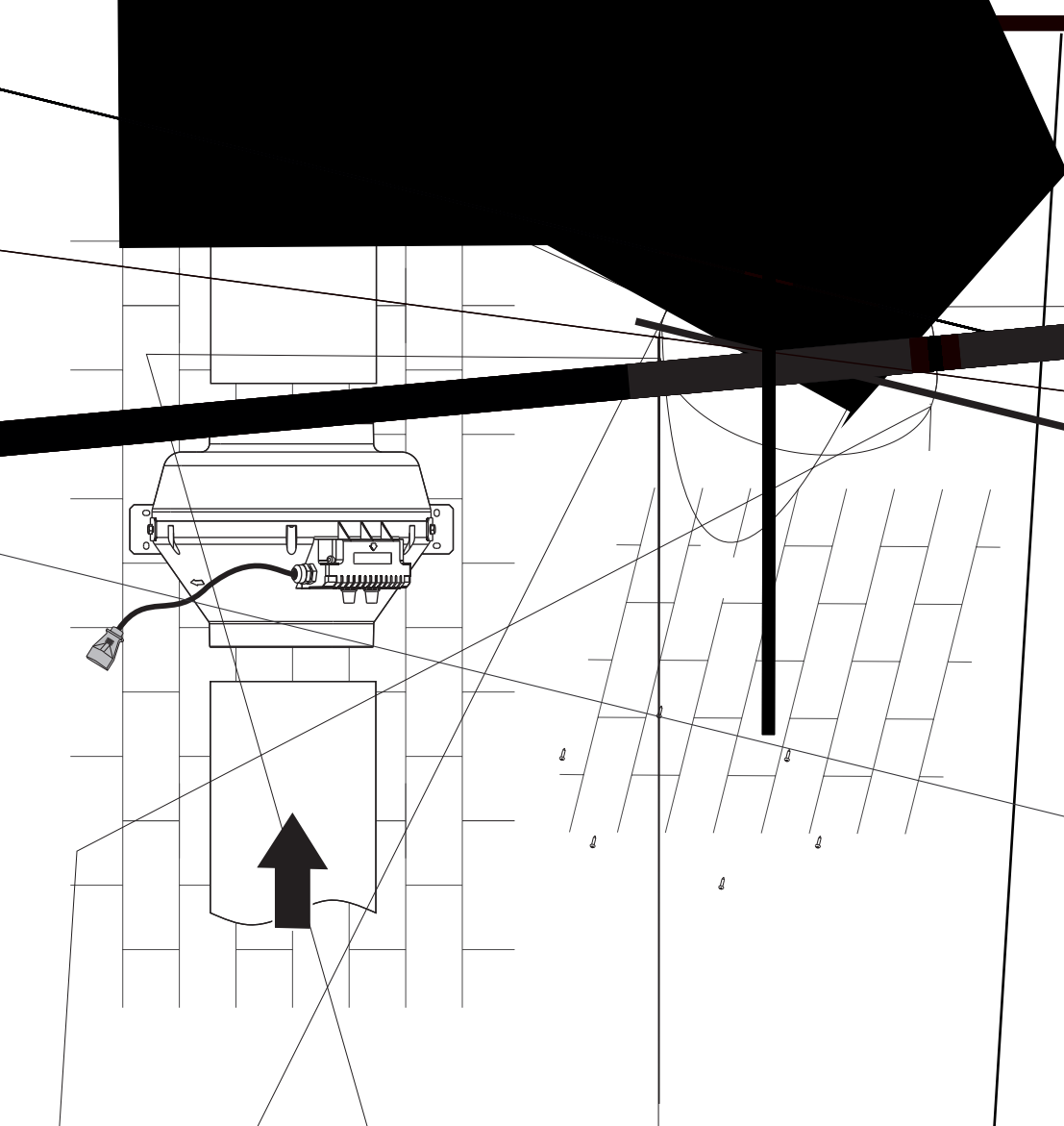

Acceptance certificate

VK ☐

VKS ☐

100 ☐
125 ☐
150 ☐
200 ☐
250 ☐
315 ☐

Q ☐

U ☐
U1 ☐
P ☐

n ☐

R ☐

Approval mark

Sold
(Seller name and stamp)

Manufacturing date

Date of sale

The fan is duly recognized as serviceable.

www.ventilation-system.com

V02-VK(EN)-08